

mixx™ series
bassinet + stand



Thank *you!*

You've just purchased a Nuna product, and you can be sure that your child is getting the best there is. Our products are expertly engineered for safety, with luxury fabrics and sophisticated style. Whatever made you fall in love with Nuna, rest assured your adventures with your little one will be easier from now on, freeing you to enjoy more happy family moments together.

IMPORTANT!
KEEP THESE INSTRUCTIONS FOR FUTURE REFERENCE:
READ ALL INSTRUCTIONS CAREFULLY BEFORE ASSEMBLY AND USE OF THE BASSINET.

Contents

Product Information
- Product Registration (US consumers only) 4
- Limited Warranty 4
- Contact 4

Child Usage Requirements 5

Warnings 6

Parts List 9

Bassinet Setup 10

Stand Setup 18

Stand Use 18

Bassinet Use on a Stroller 22

Cleaning and Maintenance 24

Product Information

Model Number:_____

Manufactured in (date):_____

Product Registration (US consumers only)

Please fill in the above information. The model number and the manufactured in date are located on the stand frame and on the mattress board inside the bassinet (under the soft goods). Fill out the prepaid registration postcard attached to the product and mail it today.

To register your product please visit:
www.nunababy.com
Click on the "Register Gear" link on the homepage.

Limited Warranty

We have purposely designed our high-quality products so that they can grow with both your child and your family. Because we stand by our product, our gear is covered by a custom warranty per product, starting from the day it was purchased. Please have the proof of purchase, model number and manufactured in date available when you contact us.

For warranty information please visit:
www.nunababy.com/warranty

Contact

For replacement parts, service, or additional warranty questions, please contact our customer service department.

In the USA:
infoUSA@nunababy.com
www.nunababy.com
1.855.NUNA.USA (1.855.686.2872)

Child Usage Requirements

Bassinet Usage

This bassinet is suitable for use with children who meet the following requirements:

Weight: Up to 20 lb (9 kg) (birth–6 months)
Height: 27 in. (68 cm) or less

STOP using the bassinet when the infant begins to push up on hands and knees.

Stand Usage

Only use the Nuna MIXX series bassinet or MIXX series stroller seat on this stand.

For child usage requirements for the MIXX series stroller seat, refer to the instruction manual for that product.

⚠WARNING

Failure to follow these warnings and the instructions could result in death or serious injury.

SUFFOCATION HAZARD

Babies have suffocated:

- On pillows, comforters, and extra padding.
- In gaps between a wrong size mattress, or extra padding and product sides.

- **NEVER** add soft bedding or padding.
- Use **ONLY** mattress provided by Nuna.
- Always place baby on back to sleep to reduce the risk of SIDS and suffocation.
- If a sheet is used with the mattress, use only the one provided by Nuna or one specifically designed to fit the dimensions of the product mattress.
- Bassinet can roll over on soft surfaces and suffocate child. **NEVER** place bassinet on beds, sofas, or other soft surfaces.

FALL HAZARD: To help prevent falls,

- Do not use this product when the infant begins to push up on hands and knees or has reached 20 lb (9 kg), whichever comes first.
- Always check that the bassinet is securely locked on the base/stand by pulling upwards on the bassinet bed.
- Strings can cause strangulation! Do not place items with a string around a child's neck, such as hood strings or pacifier cords. Do not suspend strings over a product or attach strings to toys.

- Do not use if any part of the bassinet is broken, torn, or missing.
- Only use bassinet on stand or stroller. Never use on floor or an unintended elevated surface.
- Do not use if any part of the MIXX™ series bassinet + stand is broken, torn, or missing.
- Child's movement can slide bassinet. NEVER place bassinet on counter tops, tables, or any other elevated surface. ONLY use bassinet on a Nuna stroller designed for use with the bassinet, or on the included stand. DO NOT use bassinet on floor/ground.

A child's safety is your responsibility. Always provide the supervision necessary for the continued safety of your child. Never leave your child unattended.

MAKE SURE stand and bassinet are fully erected and latches are locked before use.

Only use the Nuna MIXX series bassinet or MIXX series stroller seat on this stand. Do not attempt to attach any other items to this stand.

Only use on firm ground that is horizontal, level and dry.

The seat recline must be in the vertical position when using the seat on the stand.

Be certain the stand is fully opened before placing the bassinet or stroller seat on the stand. Fold stand and store away when not in use.

Never place product near a window where cords from blinds or drapes can strangle child.

DO NOT place any item on the canopy of this product.

Child can become entrapped and die when improvised netting or covers are placed on top of bassinet. Never add such items to confine child in bassinet.

To avoid any danger of suffocation, remove all plastic covers before using this product and destroy or keep away from babies and children!

Keep small parts away from children as they pose a choking hazard.

DO NOT make any changes or modifications to this product, that is not specified in this manual.

AVOID FINGER ENTRAPMENT Use care when folding and unfolding the stand.

NEVER use this bassinet as a means to transport an infant in a motor vehicle.

NEVER leave child in the bassinet when ascending or descending stairs or escalators.

NEVER carry more than one child at a time in this product.

DO NOT allow child to crawl, sit or play in storage basket or product.

DO NOT use the bassinet if it is damaged or broken.

Parts List

No tools are required for assembly.

1 Sky Drape™
2 Cover
3 Canopy Visor
4 Handle
5 Handle Fold Button
6 Bassinet Release Button
7 Attachment Mount
8 Mattress and Cover
9 Stand Mounts
10 Storage Basket
11 Storage Basket Frame Joints

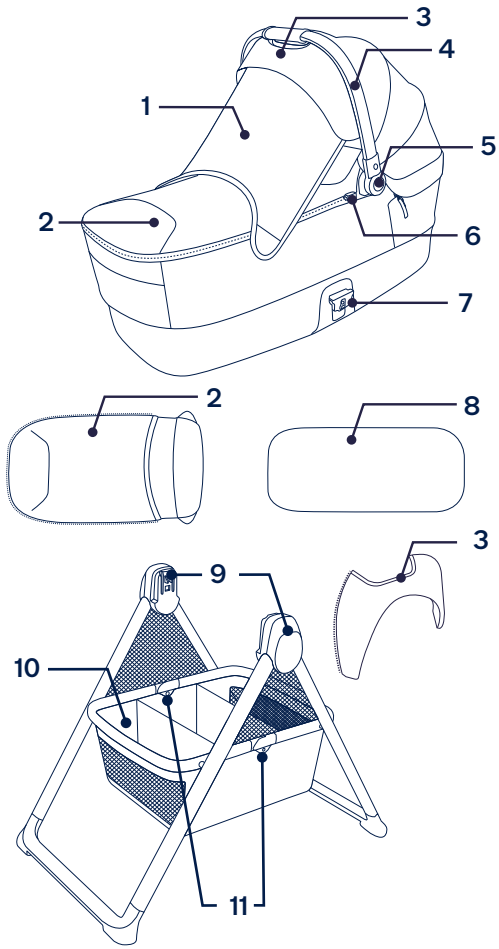

Bassinet Setup

Unfold Bassinet

1 - Take the bassinet out.

2 - Push out the support mounts on both ends and both sides of the bassinet until they lock into place. A “click” sound means the support mount is locked. Push down on the bassinet to check.

3 - Pull up the canopy **(2)** as illustrated while pressing the buttons on both sides **(1)**.

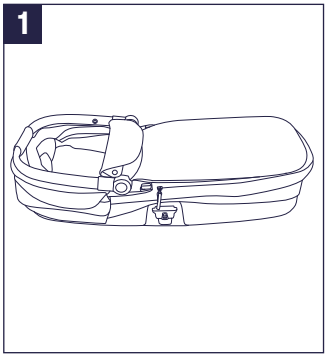
1

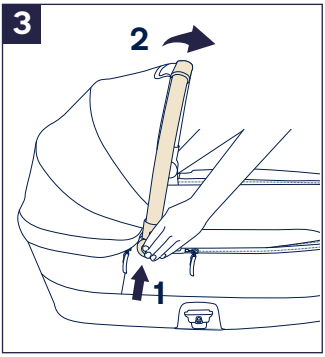
3
2
1

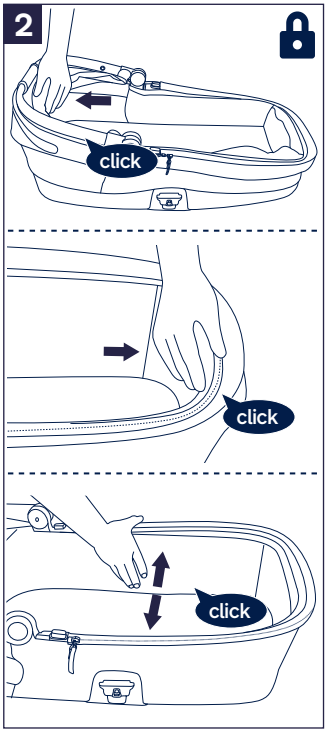
2
click
click
click

Fold Bassinet

1 - To fold the bassinet, release the support mounts on both ends and both sides.

2 - Fold the canopy **(2)** while pressing the handle adjustment button **(1).**

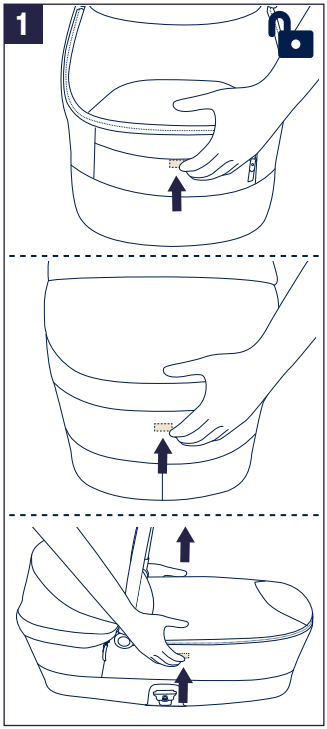
1

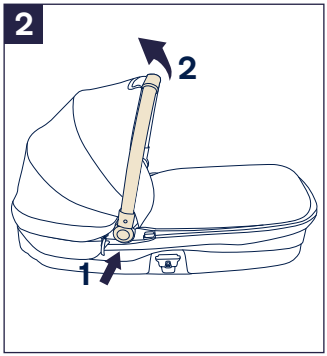
2
2
1

Canopy

1 - To open the canopy, rotate the handle up.

The handle will stop in the convenience position for accessing child **(2)**. To continue to open the canopy further, push the buttons on both sides of the handle and pull handle towards the foot end of the bassinet until it clicks into the fully extended position **(1)**.

Be sure handle is locked in the fully extended position before lifting the bassinet by the handle.

To close the canopy, press the handle fold buttons simultaneously on both sides, and rotate down.

Bassinet Cover

2 - Attach the cover to the bassinet with zipper **(1)**, then attach snap buttons to the both sides of the handle **(2)**.

⚠ **DO NOT** use the Sky drape™ with the top panel flipped up.

Sky Drape™

3 - Pull out the Sky drape from underneath the flap under the canopy as shown. Attach the magnets on the corners of the Sky drape to the side rails of the bassinet.

4 - Store the Sky drape under the canopy when not in use.

Canopy Ventilation

5 - Fold the rear panel of the canopy up, and the rear panel of the bassinet down for more ventilation.

6 - Fold the front panel of bassinet down for more ventilation.

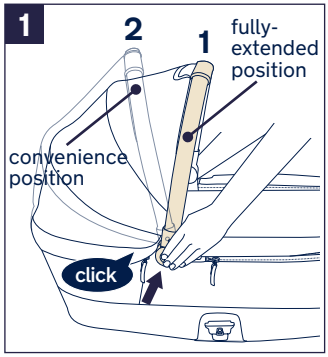
1
2
1
fully-
extended
position
convenience
position
click

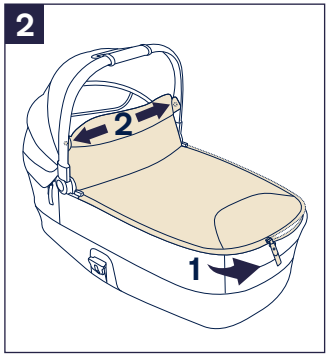
2
2
1


3

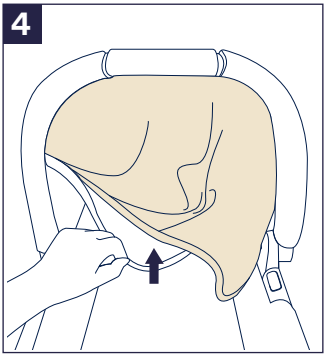
4

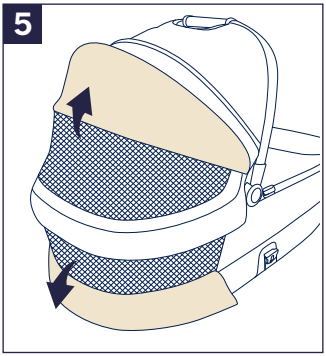
5

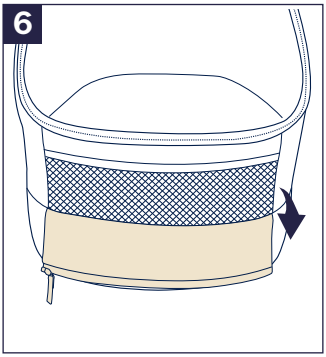
6

Canopy Visor

1 - To attach the canopy visor, zip it to the underside of the canopy on both sides of handle.

Visor flips in or out for added sun protection.

Unzip visor to remove.

2 - ⚠ Before using the bassinet, peel off the protective film covering the BMW logo button located on the rear canopy panel.

Mattress

⚠WARNING

To avoid serious injury, always use the mattress when using the bassinet.

3 - Insert the mattress into the bassinet so that the zipper on the mattress is at foot end of bassinet.

4 - Mattress should be completely flush with the bottom of the bassinet.

5 - To wash the mattress cover, take out the mattress pad and remove the cover. Machine wash. Line dry only. **DO NOT** wash the mattress.

⚠ Zipper end of mattress MUST be placed in foot end of bassinet.

Bassinet Liner

Close the canopy for easier access and remove bassinet mattress.

6 - To wash liner, unzip and remove from bassinet.

Always reinstall liner before use of bassinet.

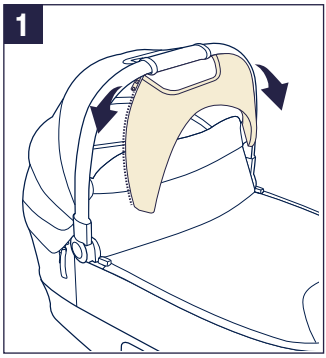
1

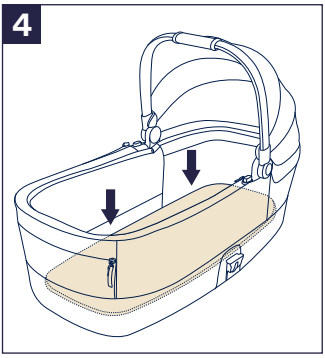
4

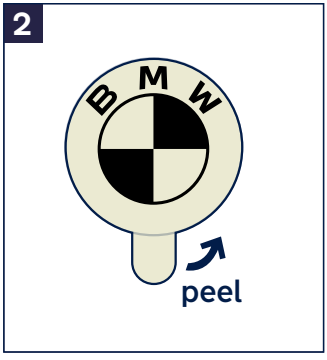
2
B M W
peel

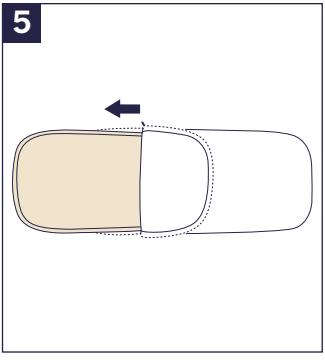
5

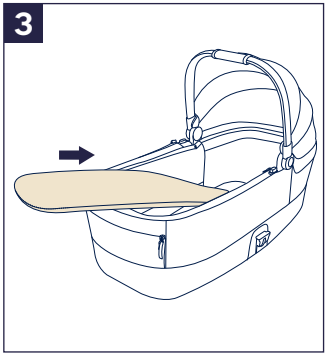
3

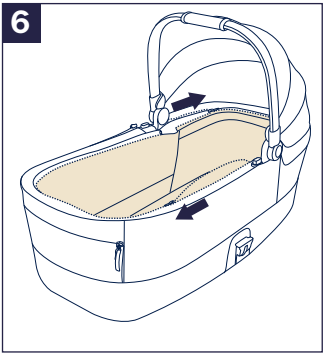
6

Stand Setup

1 - Pull the ends of the storage basket frame away from each other.

2 - The storage basket frame joints should lie flat before attaching an accessory.

⚠ Be certain the stand is fully opened before placing the bassinet or stroller seat on the stand.

Push down on the joints to ensure that the hinge is properly engaged.

Stand Use

Only use the Nuna MIXX series bassinet or MIXX series stroller seat on this stand.

Basket

3 - The storage basket has 3 compartments for use.

⚠ Do not place more than 10 lb (4.5 kg) in storage basket.

Fold

4 - To fold the stand, lift the storage basket frame joints up.

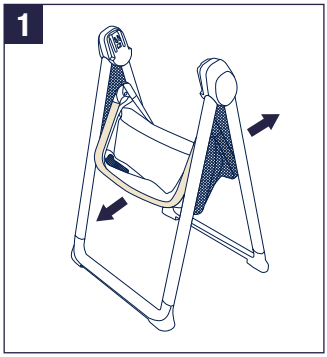
1

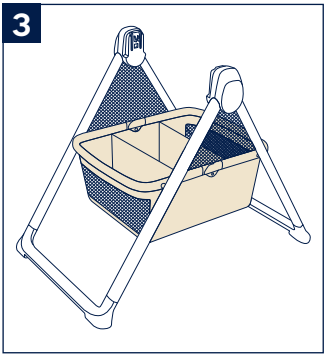
3

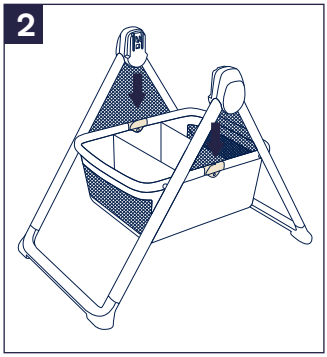
2

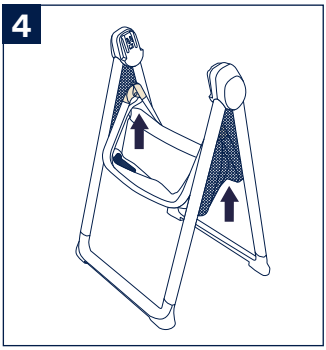
4

Stand Use with MIXX series Bassinet

For bassinet assembly and usage, please refer to the instructions starting on page 10.

The bassinet can be attached both ways on the stand.

1 - To attach the bassinet, align the sides of the bassinet with the stand mounts.

Place the bassinet directly down until it clicks into place.

A **“click”** sound means the bassinet is attached.

2 - To remove the bassinet, squeeze the bassinet release buttons **(1)** and lift up **(2)**.

⚠ Remove the bassinet before folding the stand.

Stand Use with MIXX series Stroller Seat*

For stroller seat assembly and usage, please refer to the stroller instruction manual.

The stroller seat can be attached both ways on the stand.

⚠ The seat recline must be in the vertical position when using the seat on the stand.

⚠ The arm bar **MUST** be removed before using the seat on the stand.

3 - To attach the stroller seat, align the sides of the stroller seat with the stand mounts.

Place the stroller seat directly down until it clicks into place.

A **“click”** sound means the stroller seat is attached.

4 - To remove the stroller seat, squeeze the stroller seat release buttons **(1)** and lift the stroller seat up **(2)**.

⚠ Remove the stroller seat before folding the stand.

*Stroller seat sold separately


1
click

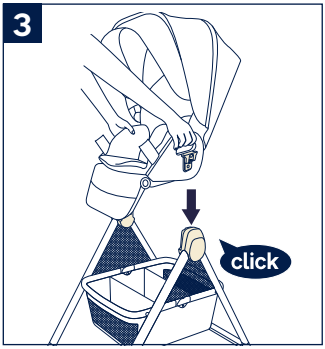
3
click

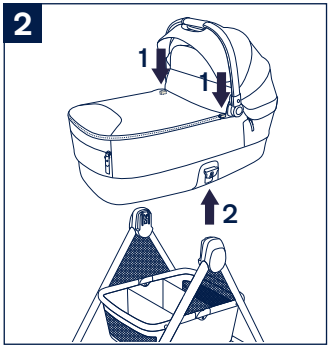
2
1
1
2

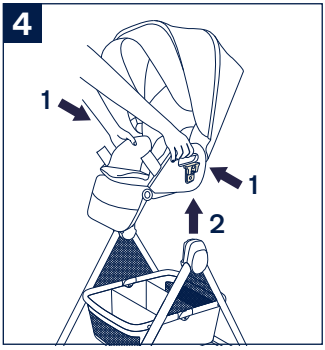
4
1
1
2

Bassinet Use on a Stroller

Bassinet Attachment on Stroller Frame

The bassinet can be attached in a rear-facing or forward-facing mode when on the stroller frame.

1 - To attach bassinet to the stroller frame, align the sides of the bassinet with the seat mounts.

Place the bassinet directly down until it clicks into place.

2 - A **“click”** sound means the bassinet is attached completely.

Bassinet Removal

3 - To remove bassinet, press the bassinet release buttons and lift up.

⚠ Remove bassinet before folding stroller.

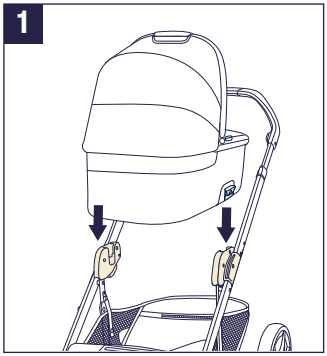
1

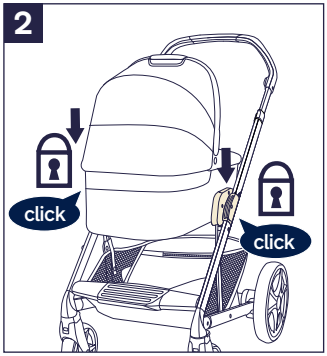
2
click
click

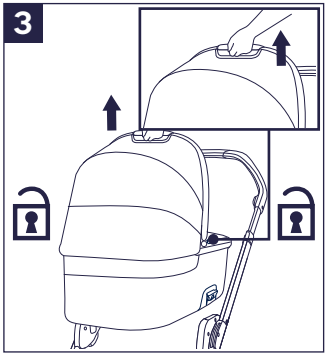
3

Cleaning and Maintenance

Clean the frame, plastic parts, and fabric with a damp cloth, but do not use abrasives or bleach. Do not use silicone lubricants as they will attract dirt and grime. Do not store this product in a damp place.

To ensure long-lasting use, wipe the bassinet off with a soft, absorbent cloth after using it in rainy weather and before storing away.

Refer to the care label attached to the bassinet fabric for washing and drying instructions.

It is normal for fabric to color from sunlight and to show wear and tear after a long period of use, even when used normally.

For reasons of safety, only use original Nuna parts.

Nuna Baby Essentials, Inc. Nuna and all associated logos are trademarks.

IM-001992D



Nuna Baby Essentials, Inc.
70 Thousand Oaks Blvd. | Morgantown, PA 19543
1.855.NUNA.USA | nunababy.com

The BMW logo and the BMW wordmark are trademarks of BMW AG and are used under license.